OPERATING MANUAL

MASTERFLEX® L/S®

12V DC POWERED PUMP DRIVES

Model Nos.

07533-20 07533-40

Cole-Parmer Instrument Co.
1-800-MASTERFLEX (627-8373) (U.S. and Canada only)
11 (847) 549-7600 (outside U.S.)
(847) 549-7600 (Local)
www.masterflex.com

Barnant Company
1-800-637-3739 (U.S. and Canada only)
11 (847) 381-7050 (outside U.S.)
(847) 381-7050 (Local)
www.barnant.com

A-1299-0107
Edition 09

⚠ WARNING: PRODUCT USE LIMITATION

This product is not designed for, nor intended for use in, patient-connected applications, including, but not limited to, medical and dental use and, accordingly, has not been submitted for FDA approval.

WARNING: ⚠ **Tubing breakage may result in fluid being sprayed from pump. Use appropriate measures to protect operator and equipment.**

CAUTION: ⚠ **Use caution when servicing internal components to avoid damage to the unit.**

C-FLEX—Reg TM Consolidated Polymer Technologies, Inc.

Trademarks bearing the ® symbol in this publication are registered in the U.S. and in other countries.

SETUP AND DRIVE OPERATION

INTRODUCTION AND GENERAL DESCRIPTION

This 12V DC powered drive, when used with a MASTERFLEX® L/S® Pump Head, is designed for battery-operated fluid transfer in field applications.

VARIETY OF PUMP HEADS ACCEPTED

Use only MASTERFLEX precision tubing with MASTERFLEX pumps to ensure optimum performance. Use of other tubing may void applicable warranties.
Mount 1 or 2 MASTERFLEX® L/S® Pump Heads and all MASTERFLEX-compatible pump heads. See individual pump heads for flow rates and torque requirements. (**NOTE:** Use only MASTERFLEX® L/S® C-FLEX® or silicone tubing with model 07533-40.)

SETUP AND DRIVE OPERATION

1. Unpack the drive, save packing material until proper product operation has been verified.
2. Mount pump head and load tubing (see pump head manual).
3. Plug in the adapter cables or connect 16 ga. power input leads to binding posts on back of drive.
   Positive input: Red
   Negative input: Black

(**NOTE:** Electronic transistorized speed control circuit. Pump will run only when correct polarity is applied.)

4. Selecting motor direction turns pump on. When changing directions, hesitate slightly in the off position to minimize surge currents.
5. Adjust flow rate with the 1-turn potentiometer speed control.

WARNING: Tubing breakage may result in fluid being sprayed from pump. Use appropriate measures to protect operator and equipment.

A. Pump Head Mounting Holes
B. 1-turn Speed Control
C. Handle
D. Power/Directional Switch

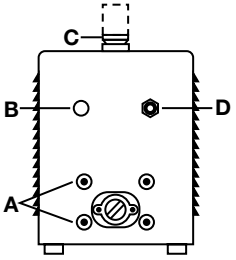

Front view of drive

A. DC power terminal posts

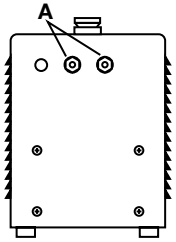

Rear view of drive

MAINTENANCE

CLEANING

Keep the drive enclosure clean with mild detergents. Never immerse nor use excessive fluid.

MOTOR BRUSH CHECK/REPLACEMENT

NOTE: Brushes should be checked every 6 months or 2000 operating hours or if erratic operation occurs.

CAUTION: ***Use caution when servicing internal components to avoid damage to the unit.***

1. Place the POWER/DIRECTIONAL SWITCH in the off position.
2. Disconnect the DC power input from the terminal posts on the back of the drive.
3. Remove the screws from each side of the housing and lift off the housing.
4. Carefully unscrew each brush cap. Withdraw the brush, and examine it for wear.

NOTE: Replace both brushes, if either brush is less than 7.6 mm (0.300 in) long from base to point.

5. Insert brushes and install brush cap.
6. Install housing and secure with screws on each side.
7. Connect the DC power input to the terminal posts on the back of the drive.

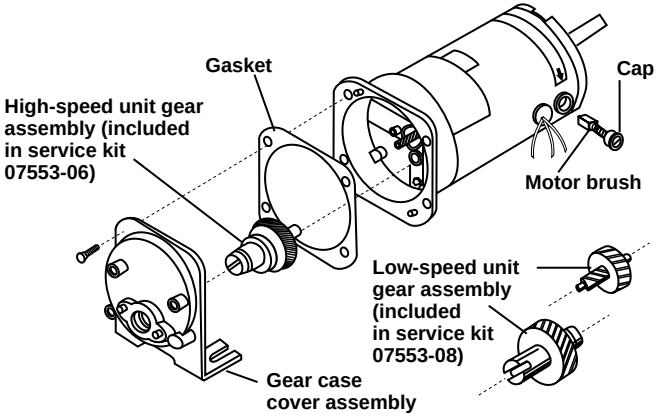

TROUBLESHOOTING

If drive does not operate, disconnect power:

a. check pump head for tubing jam,
b. check polarity of power input leads,
c. check drive gear for stripping.

Contact your dealer for further service needs.

REPLACEMENT PARTS AND ACCESSORIES

07553-06, Gear Service Kit, High-speed units
07553-08, Gear Service Kit, Low-speed units
07553-09, Gear only, High-speed units
07533-01, Motor Brushes, set of two
07520-03, Brush cap holder
07573-02, Cigarette lighter adapter cable, 25 ft. (7.6 m) long
07573-04, Car/boat battery adapter cable, 8 ft. (2.4 m) long

SPECIFICATIONS

Model Number	Speed Range (rpm)	Nominal Voltage	Power V DC, Amps	Nominal Power Input	Torque kg▪cm (oz-in)
07533-20 07533-40	20 – 90 100 – 500	12V DC 12V DC	10.8 – 13.2, 3.2 10.8 – 13.2, 3.2	38W 38W	13 (180) 6.5 (90)

Operating Temperature:	**0˚ to 40˚C**
Storage Temperature:	**–20˚ to 60˚C**
Humidity (non-condensing):	**10% to 90%**
Altitude:	**Less than 2000 m**
Chemical Resistance:	**Exposed material is painted CRS, aluminum and plastic**
Speed Regulation:	**± 5%**
Enclosure Rating:	**IP21per IEC 529**
Reversible:	**Yes**
Dimensions (L × W × H):	**279 × 165 × 222 mm (11 in × 6-1/2 in × 8-3/4 in)**
Weight:	**5.0 kg (11 lbs)**
Compliance (For CE Mark):	**EN61326-1/A1: 1998 (EU EMC Directive)**

WARRANTY

Use only MASTERFLEX precision tubing with MASTERFLEX pumps to ensure optimum performance. Use of other tubing may void applicable warranties.

The Manufacturer warrants this product to be free from significant deviations from published specifications. If repair or adjustment is necessary within the warranty period, the problem will be corrected at no charge if it is not due to misuse or abuse on your part, as determined by the Manufacturer. Repair costs outside the warranty period, or those resulting from product misuse or abuse, may be invoiced to you.

The warranty period for this product is noted on the Warranty Card.

PRODUCT RETURN

To limit charges and delays, contact the seller or Manufacturer for authorization and shipping instructions before returning the product, either within or outside of the warranty period. When returning the product, please state the reason for the return. For your protection, pack the product carefully and insure it against possible damage or loss. Any damages resulting from improper packaging are your responsibility.

TECHNICAL ASSISTANCE

If you have any questions about the use of this product, contact the Manufacturer or authorized seller.

Cole-Parmer Instrument Co.
625 East Bunker Court
Vernon Hills, Illinois U.S.A. 60061-1844
1-800-MASTERFLEX (627-8373) (U.S. and Canada only)
11 (847) 549-7600 (outside U.S.)
(847) 549-7600 (Local)
FAX (847) 247-2929 (U.S. and Canada only)
11 (847) 549-1700 (Fax outside U.S.)
www.masterflex.com
e-mail: techinfo@coleparmer.com

ISO 9001 SUPPLIER CERTIFIED

Barnant Company
28W092 Commercial Ave.
Barrington, Illinois U.S.A. 60010-2392
1-800-637-3739 (U.S. and Canada only)
11 (847) 381-7050 (outside U.S.)
(847) 381-7050 (Local)
11 (847) 381-7053 (Fax outside U.S.)
(847) 381-7053 (Local Fax)
www.barnant.com
e-mail: barnant@barnant.com

ISO 9001 REGISTERED

Printed in U.S.A.
090102

EU Declaration of Conformity

Name of Apparatus: MASTERFLEX® 12V DC L/S® Pump Drives

Model Numbers: 07533-20, -40, 77930-00

Description of Apparatus: Variable Speed Peristaltic Pump Motor Drive. Used with pump head and tubing to pump fluids.
07533-20 — 20 to 90 rpm
07533-40 — 100 to 500 rpm
77930-00 — Bundled 07533-40

Barnant Company declares that the above models are in conformity to the following harmonized standards and directives:

Applicable Directives	Applicable Specifications	Manufacturer's Report Number
89/336/EEC 92/31/EEC 93/68/EEC	EN61326-1/A1: 1998	TR9540

Manufacturer:

Barnant Company Division
Cole-Parmer Instrument Company
28W092 Commercial Avenue
Barrington, IL 60010-2392
USA
Tel.: 847-381-7050

Manufacturer's Signature:

James W. Doll
Vice President, Engineering

31 October, 2000
Date